RS-FSA-N01

Aluminum shell wind speed transmitter

an instruction manual

(Type 485)

Catalogue

1. Product introduction 4
2. Equipment installation instructions 6
3. Installation and use of configuration software 7
4. communication protocol 8
5. Common problems and solutions 10
6. contact information 10
7. Document History 11

1. Product introduction

1.1Product Overview

The RS-FSA-N01 wind speed transmitter is small and light in shape, easy to carry and assemble. The three-cup design concept can effectively obtain wind speed information. The shell is made of high-quality aluminum alloy profiles, and the exterior is electroplated and sprayed with plastic. It has good anti-corrosion, anti-corrosion and other characteristics, which can ensure the long-term use of the transmitter without rust. At the same time, with the internal smooth bearing system, it ensures the accuracy of information collection. It is widely used for wind speed measurement in greenhouse, environmental protection, weather station, ship, dock, aquaculture and other environments.

1.2Features

1. Range: 0-60m/s, resolution: 0.1m/s

2. Anti-electromagnetic interference processing

3. The bottom outlet mode is adopted to completely eliminate the aging problem of aviation plug rubber pad, and it is still waterproof after long-term use

4. High-performance imported bearing is adopted, with small rotating resistance and accurate measurement

5. All-aluminum shell with high mechanical strength, high hardness, corrosion resistance and rust resistance can be used outdoors for a long time

6. The structure and weight of the equipment have been carefully designed and distributed, with small moment of inertia and sensitive response

7.Standard ModBus-RTU communication protocol, convenient access

7. 1.3Main technical indicators

DC power supply (default)	10~30V DC
Maximum power consumption	0.2W（12V power supply）
Transmitter circuit operating temperature	-40℃~+60℃，0%RH~80%RH

communication interface	485 communication (ModBus) protocol Data bit length: 8 bits Parity check method: none Stop bit length: 1 bit Default ModBus communication address: 1 Baud rate: 2400, 4800 (default), 9600, 19200, 38400, 57600, 115200
Parameter setting	Configure with the provided configuration software through 485 interface
resolution ratio	0.1m/s
measuring range	0~60m/s
Dynamic response time	≤2s
precision	± (0.2+0.03V) m/s V represents wind speed

1.4Product selection

RS-				Company code
	FSA-			Aluminum shell wind speed transmitter
		N01-		RS485（ModBus-rtu）
			EX	Fixed code

1.5 Equipment size

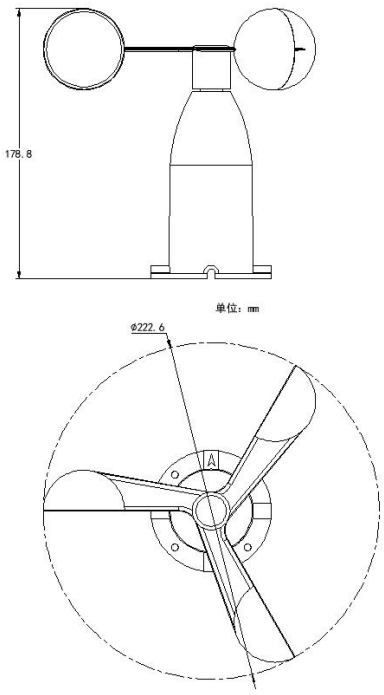

2. Equipment installation instructions

2.1 Inspection before equipment installation

Equipment list:

- 1 transmitter
- Four mounting screws
- Certificates, warranty cards, wiring instructions, etc
- USB to 485 (optional)
- 485 terminal resistance (optional)
- Install 1 trailer

2.2 Interface description

Wide voltage power input can be 10~30V. When wiring the 485 signal line, pay attention to that the two lines A B cannot be connected reversely, and the addresses of multiple devices on the bus cannot conflict.

2.3 Electrical wiring

	Linear color	explain
source	brown	V+（10~30V DC）
	black	V-
communication	green	485-A
	blue	485-B

2.4 Field wiring instructions

When multiple 485 devices are connected to the same bus, there are certain requirements for field wiring. Please refer to the 485 Device Field Wiring Manual in the data package for details。

2.5Installation method

Flange installation is adopted. Threaded flange connection makes the lower pipe fittings of the wind speed sensor firmly fixed on the flange plate. The chassis is 79.8mm, and four mounting holes with an average diameter of 6mm are opened on the circumference of 68mm. Bolts are used to tightly fix it on the bracket, so that the whole set of instruments can be kept at the best levelness and ensure the accuracy of wind speed data. The flange connection is convenient to use and can withstand large pressure.

2.6matters needing attention

1. Users are not allowed to disassemble the sensor by themselves, let alone touch the sensor core to avoid damage to the product.

2. Keep away from high-power interference equipment as far as possible to avoid inaccurate measurement, such as frequency converter, motor, etc. When installing and disassembling the transmitter, the power supply must be disconnected first. Water entering the transmitter can cause irreversible changes.

3. Prevent chemical reagents, oil, dust, etc. from directly damaging the sensor. Do not use it for a long time under the conditions of condensation and extreme temperature, and strictly prevent cold and hot shock.

3. Installation and use of configuration software

3.1 Software selection

Open the data package and select "Debugging software" - "485 parameter configuration software”， find

Open it。

3.2 Parameter setting

① Select the correct COM port (check the COM port in "My Computer - Properties - Device Manager - Port"). The following figure lists the drive names of several different 485 converters.

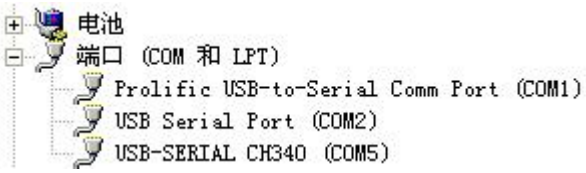

② . Connect and power on only one device separately, click the test baud rate of the software, and the software will test the baud rate and address of the current device. The default baud rate is 4800bit/s, and the default address is 0x01.

③ . Modify the address and baud rate as needed, and query the current function status of the device.

④ . If the test is not successful, please recheck the equipment wiring and 485 drive installation.

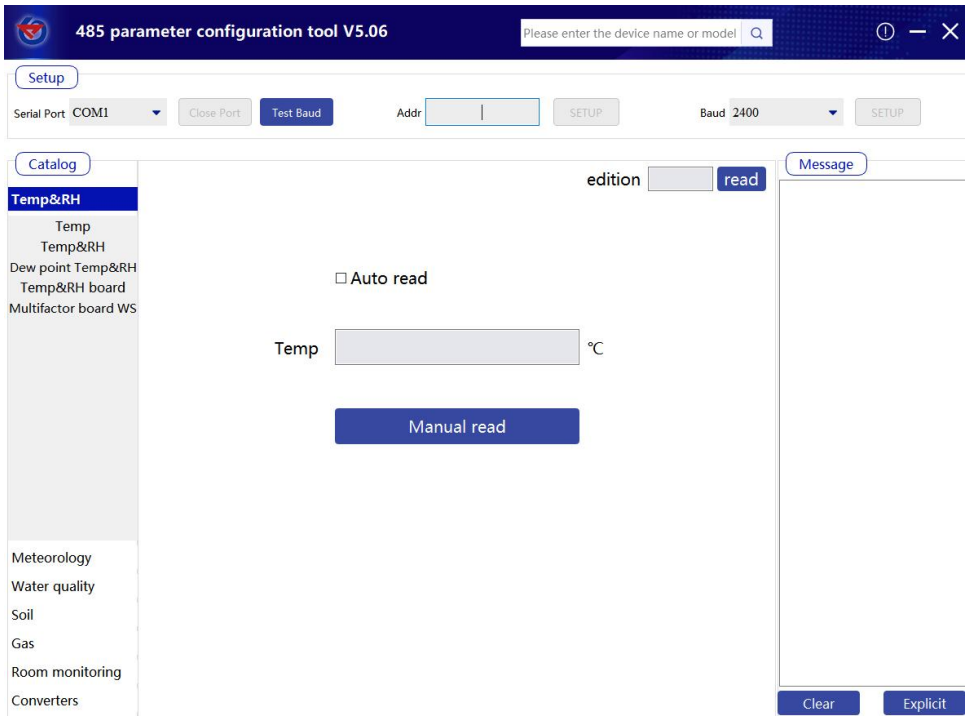

4. communication protocol

4.1Basic communication parameters

code	8-bit binary
Data bits	8bit
Parity bit	-
Stop bit	1bit
Error check	CRC（Redundant cyclic code）
Baud rate	2400bit/s, 4800bit/s, 9600bit/s, 19200bit/s, 38400bit/s, 57600bit/s, 115200bit/s can be set, and the factory default is 4800bit/s

4.2 Data frame format definition

Modbus-RTU communication protocol is adopted, and the format is as follows:

Time of initial structure ≥ 4 bytes

Address code=1 byte

Function code=1 byte

Data area=N bytes

Error check=16-bit CRC code

Time to end structure ≥ 4 bytes

Address code: the address of the transmitter, which is unique in the communication network (factory default 0x01).

Function code: the instruction function indication sent by the host. This transmitter only uses

function code 0x03 (read register data).

Data area: The data area is specific communication data. Note that the high byte of 16bits data comes first!

CRC code: two-byte check code.

Host query frame structure:

Address code	Function code	Register start address	Register length	Check code low bit	Check code high bit
1byte	1byte	2byte	2byte	1byte	1byte

Slave response frame structure:

Address code	Function code	Number of valid bytes	Data Zone 1	Second data area	Nth data area	Check code
1byte	1byte	1byte	2byte	2byte	2byte	2byte

4.3 Register address

Register address	PLC or configuration address	content	operate
0000 H	40001	Instantaneous wind speed Uploaded data is 10 times the real value	read only

4.4 Communication protocol example and explanation

For example, read the wind speed value of the device address 0x01

Inquiry frame：

Address code	Function code	Start address	Data length	Check code low bit	Check code high bit
0x01	0x03	0x00 0x00	0x00 0x01	0x84	0x0A

Response frame: (for example, read that the current wind speed is 8.6 m/s)

Address code	Function code	Returns the number of valid bytes	Current wind speed value	Check code low bit	Check code high bit
0x01	0x03	0x02	0x00 0x56	0x38	0x7A

Wind speed calculation:

Current wind speed: 0056H (hex)=86=>wind speed=8.6m/s

5. Common problems and solutions

5.1 The device cannot be connected to PLC or computer

Possible causes:

1) The computer has multiple COM ports. The selected port is incorrect.

2) The device address is incorrect, or there are devices with duplicate addresses (all are 1 by default).

3) Baud rate, check method, data bit, stop bit error.

4) The polling interval and waiting time of the host are too short, and they need to be set above 200ms.

5) The 485 bus is disconnected, or the A and B lines are connected reversely.

6) If the number of equipment is too large or the wiring is too long, power supply shall be provided nearby, and 485 intensifier shall be added, and 120 Ω terminal resistance shall be added at the same time.

7) USB to 485 drive is not installed or damaged.

8) Equipment damage.

6. contact information

Shandong Renke Control Technology Co., Ltd
Headquarters address: the whole floor of 11/F, East Block, Building 8, Shuntai Square, High-tech Zone, Jinan, Shandong Province
Marketing center: the whole floor of the 10th floor of the East Block, Building 8, Shuntai Square, High-tech Zone, Jinan, Shandong Province
Post code: 250101
Fax: (86) 0531-67805165
Website: www.rkckth.com
Cloud platform address: en.0531yun.com

山东仁科测控技术有限公司 官网

欢迎关注微信公众平台，智享便捷服务

7. Document History